HOBBY PLUS

SPECK-T

1/24 RACE TRUCK

Instruction Manual

Thank you for purchasing the products of Hobbyplus RC To find out more about our products, visit our website at www.hbplusrc.com. If you encounter any problems during using, please refer to the manual first. If the problem is still not resolved, consult your local dealer directly or contact the customer service staff via Hobbyplus RC official website.

Precautions

Read the safety messages listed below before operation!

- Do not use the product at night or during bad weather conditions, like rain or thunderstorms. It can cause erratic operation or loss of control.
- Do not use the product when visibility is limited.
- Do not expose the product to rain or snow. Any exposure to moisture (water or snow) may cause erratic operation or loss of control.
- Interference may cause loss of control. To ensure the safety of you and others, do not operate in the following places:



Near any sites where other radio control activity may occur



Near people or roads



On any pond/ lake when passenger boats are present



Near power lines or communication broadcasting antennas

- Do not use this product when you are tired, uncomfortable, or under the influence of alcohol or drugs. Doing so may cause serious injury to yourself or others.
- The 2.4GHz radio band is limited to line of sight. Always keep your model in sight as a large can block the RF signal and lead to loss of control.
- Never grip the transmitter antenna during operation. It significantly degrades signal quality and strength and may cause loss of control.
- Do not touch any part of the model that may generate heat during operation, or immediately after use. The engine, motor or speed control, may be very hot and can cause serious burns.
- Misuse of this product may lead to serious injury or death. To ensure the safety of you and your equipment, read this manual and follow the instructions carefully.
- Make sure the product is properly installed in your model. Failure to do so may result in serious injury.
- Ensure that all servos operate in the correct direction. If not, adjust the direction first.
- Make sure that the model stays within range in order to prevent loss of control.
- The ce warns that the installation of the antenna used in this transmitter must be kept in distance from all the personnel and shall not be used or used with any other transmitter. The end user and the installer must provide antenna installation instructions and transmitter operating conditions to meet the requirements for rf exposure compliance.

CAUTION!

- RISK OF EXPLOSION IF BATTERY IS REPLACED BY AN INCORRECT TYPE. DISPOSE OF USED BATTERIES ACCORDING TO THE INSTRUCTIONS.

Transmitter Overview

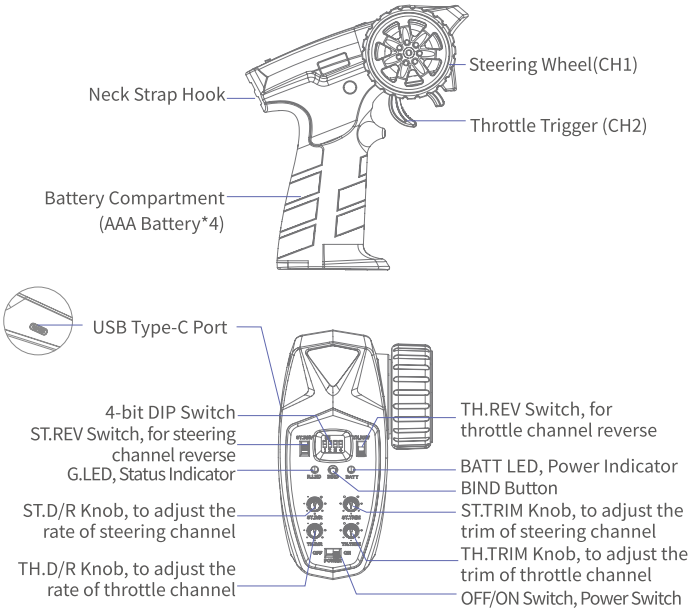

Basic Operations

Installing the AAA Battery

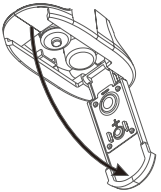

Follow the steps below to install the AAA batteries:

1. Open the battery compartment cover as illustrated.
2. Insert 4 fully-charged AAA batteries into the compartment. Make sure that the batteries are well set according to the polarities marked on the battery compartment.
3. Replace the battery compartment cover.

Powering On

Follow the steps below to turn on the transmitter:

1. Check to make sure that the batteries are fully charged and installed correctly.
2. Toggle the Power Switch to the ON position. The G.LED will be solid on.

Binding

Taking the two-way binding between the FS-MG2-BS transmitter and the FS-R2A-ESC-BS receiver as an example, please follow the steps below:

1. Turn on the transmitter while holding the BIND button, then the transmitter will enter the binding mode. At this time, the G.LED will flash quickly. Once in bind mode release the BIND button.
2. Turn on the receiver, and it will wait for 1 second for connection. If without connection, the receiver will enter the binding mode automatically. At this time, the receiver LED will be flashing fast.
3. Once the binding is successful, the receiver LED and the G.LED of the transmitter will be solid on.
4. Verify that the transmitter and the receiver are working properly. If you need to re-bind, repeat the above steps.

Note: The FS-MG2-BS transmitter complies with the 2A-BS protocol and is only compatible with receivers conforming to this protocol; Different receivers may have different binding procedures. For more information, visit FLYSKY official website for manuals and other related information.

Stick Calibration

Use this function to correct for the mechanical deviation of the throttle trigger and steering wheel, for example, deviation occurred in the self-centering or maximum minimum travel, the steps are as following:

1. Turn and hold the steering wheel clockwise to the max travel and push the throttle trigger forwards as far as possible, and at the same time turn on the transmitter, the transmitter will be in calibration mode, meanwhile, the G.LED and BATT indicators enter a two-flash-one-off state.
2. Steering Wheel Calibration: Turn the steering wheel to the max and min travel clockwise/counterclockwise respectively, and the G.LED is off.
3. Throttle Trigger Calibration: Push/pull the throttle trigger to forward/backward as far as it will go, and the BATT indicator is off.
   - Note: The calibration sequence for the steering wheel and trigger can be swapped. The G.LED turns off after calibrating either channel, while the BATT indicator turns off only after completing all calibrations.
4. Press the BIND button to save and exit in case of the calibration is successful, and the G.LED is on.

   If the calibration fails, pressing the BIND button is invalid. Repeat the steps above.

Failsafe

The failsafe function is used to protect the model and personnel when the receiver is out-of-control.
By default, it is not set, and the PWM interfaces will maintain the last output in case of out-of-control. The default failsafe protection status may vary depending on the model of the receiver, and it should be based on the specific receiver that is bound.

It can be set at the transmitter side. The setting steps are as following:

In the normal power-on state, set the control corresponding to the channel to be configured with failsafe to the preset position, meanwhile, press and hold the BIND button for 3 seconds to set the output value as the failsafe value. And the G.LED will flash rapidly three times to indicate successful configuration.

Notes: When a 2-in-1 receiver has connected, the ESC will enter the brake state when the receiver is out-of-control.

Sleep Mode

When the transmitter has been in idle alarm state over 2 minutes, it will enter the sleep mode.

In this mode, the BATT indicator will be in gradual light state, G.LED turns off, and RF is disabled.

To exit the sleep mode, power off the transmitter and restart it.

Powering Off

Follow the steps below to turn off the transmitter:

1. Turn off the receiver first.
2. Toggle the transmitter's Power Switch to the OFF position to turn off the transmitter.

Make sure to power off the receiver before turning off the transmitter. Failure to do so can result out of control. Unreasonable setting of the Failsafe may cause an accident.

Specifications

Product Model	FS-MG2-BS
Compatible Receivers	FS-R2A-ESC-BS
Compatible RC Models	Car
Number of Channels	2
RF	2.4GHz ISM
Maximum Power	<20dBm (e.i.r.p.) (EU)
RF Protocol	2A-BS
Resolution	4096
Input Power	1.5AAA*4
Low Voltage Alarm	Supported
Antenna	Single Built-in Antenna
Charging Jack	None (The USB Type-C port is only for power supply)
Firmware Update	Not Supported
Distance	>60m(Ground Distance Without Interference)
Temperature Range	-10°C ~ +60°C
Humidity Range	20% ~ 95%
Dimensions	120.5*145.2*72.6mm
Weight	128g
Color	Black
Certifications	CE, FCC ID: 2A2UNMG200

Certifications

FCC Compliance Statement

This device complies with Part 15 of the FCC Rules. Operation is subject to the following two conditions: (1) this device may not cause harmful interference, and (2) this device must accept any interference received, including interference that may cause undesired operation.

Warning: changes or modifications not expressly approved by the party responsible for compliance could void the user's authority to operate the equipment.

This equipment has been tested and found to comply with the limits for a Class B digital device, pursuant to Part 15 of the FCC Rules. These limits are designed to provide reasonable protection against harmful interference in a residential installation. This equipment generates, uses and can radiate radio frequency energy and, if not installed and used in accordance with the instructions, may cause harmful interference to radio communications. However, there is no guarantee that interference will not occur in a particular installation.
If this equipment does cause harmful interference to radio or television reception, which can be determined by turning the equipment off and on, the user is encouraged to try to correct the interference by one or more of the following measures:
-- Reorient or relocate the receiving antenna.
-- Increase the separation between the equipment and receiver.
-- Connect the equipment into an outlet on a circuit different from that to which the receiver is connected.
-- Consult the dealer or an experienced radio/TV technician for help.

EU DoC Declaration

Hereby, [ShenZhen FLYSKY Technology Co., Ltd.] declares that the Radio Equipment [FS-MG2-BS] is in compliance with RED 2014/53/EU. The full text of the EU DoC is available at the following internet address:
www.flyskytech.com/info_detail/10.html

RF Exposure Statement

The device has been evaluated to meet general RF exposure requirement.The device can be used in portable exposure condition without restriction.

Environmentally friendly disposal

Old electrical appliances must not be disposed of together with the residual waste, but have to be disposed of separately. The disposal at the communal collecting point via private persons is for free. The owner of old appliances is responsible to bring the appliances to these collecting points or to similar collection points. With this little personal effort, you contribute to recycle valuable raw materials and the treatment of toxic substances.

CAUTION

- replacement of a battery with an incorrect type that can defeat a safeguard (for example, in the case of somelithium battery types);
- disposal of a battery into fire or a hot oven, or mechanically crushing or cutting of a battery, that can result in anexplosion;
- leaving a battery in an extremely high temperature surrounding environment that can result in an explosion or theleakage of flammable liquid or gas; and
- a battery subjected to extremely low air pressure that may result in an explosion or the leakage of flammable liquid or gas.

FCC ID: 2A2UNMG200

Manufacturer: ShenZhen FLYSKY Technology Co., Ltd.
Address: 16F, Huafeng Building, No. 6006 Shennan Road, Futian District, Shenzhen, Guangdong, China

本说明书中的图片和插图仅供参考，可能与实际产品外观有所不同。 产品设计和规格可能会有所更改，恕不另行通知。

Figures and illustrations in this manual are provided for reference only and may differ from actual product appearance. Product design and specificatiions may be changed without notice.

感谢您购买贺比嘉模型公司的产品!欲知更多产品信息，请浏览以下官方网站：www.hbplusrc.com
如果您在使用中遇到任何问题，请先查阅发射机使用说明书。如果问题仍未得到解决，请直接联系当地经销商或者访问官网联系客服人员。

注意事项！

开始操作前请务必阅读以下安全信息！

- 请不要在夜晚或雷雨天气使用本产品，恶劣的天气环境有可能导致遥控设备失灵。
- 请不要在能见度有限的情况下使用本产品。
- 请不要在雨雪或有水的地方使用本产品。如果有液体进入到系统内部，可能会导致运行不稳定或设备失灵。
- 信号干扰可能导致设备失控。为保证您和他人的安全，请不要在以下地点使用本产品：



基站附近或其他无线电活跃的地方



人多的地方或道路附近



有客船的水域



高压电线或通信广播天线附近

- 当你感到疲倦、不舒服，或在摄入酒精或服食导致麻醉或兴奋的药物后，不要操作本产品，否则可能对自己或他人造成严重的伤害。
- 2.4GHz 无线电波段完全不同于之前所使用的低频无线电波段。使用时请确保模型产品在您的视线范围内飞行，大的障碍物将会阻断无线电频率信号从而导致遥控失灵模型失控。
- 在使用过程中，严禁紧握发射机天线，否则将会大大减弱无线电传播信号的质量和强度，导致遥控失灵模型失控。
- 在操作或使用模型后，请勿触摸任何可能发热的部位，如发动机、电机、定速设定等。这些部件可能非常热，容易造成严重的烧伤。
- 遥控设备使用不恰当可能导致操作者或他人严重受伤，甚至死亡。为保证您和设备的安全，请仔细阅读使用说明书并按照要求进行操作。
- 使用前必须确保本产品与模型安装正确，否则可能导致模型发生严重损坏。
- 操控时，请先确认模型所有舵机的动作方向与操控方向一致。如果不一致，请调整好正确的方向。
- 当遥控距离持续较远时，有发生失控的可能。请适当缩短遥控的距离。
- 特此，【ShenZhen FLYSKY Technology Co., Ltd.】声明无线电设备【FS-MG2-BS】符合 RED2014/53/EU. 欧盟 DoC 声明、FCC 声明可在以下互联网地址：www.flyskytech.com/info_detail/10.html 获取。
- 此发射机所用天线的安装必须与所有人员保持距离，不得与任何其他发射机共用或一起使用。必须向最终用户和安装人员提供天线安装说明和发射机操作条件，以满足射频暴露合规要求。

- 注意：使用类型不正确的电池可能发生爆炸风险，请妥善处理使用完的电池。

发射机概览

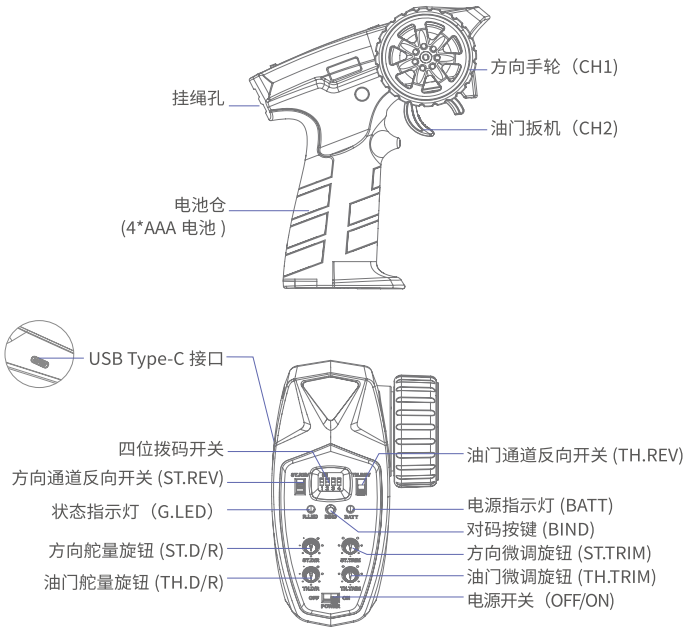

基本操作

AAA 电池安装

请按照以下步骤安装 AAA 电池：

1. 打开电池仓盖 (如图所示）；
2. 将 4 颗电量充足的电池按标注的极性方向装入电池仓内；
3. 盖好电池仓盖。

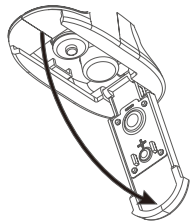

开机

请按照以下步骤打开发射机：

1. 检查系统状态，确保电池电量充足且安装正确；
2. 将电源开关拨到 [ON] 位置，G.LED 指示灯常亮。

对码

以 FS-MG2-BS 发射机与 FS-R2A-ESC-BS 接收机双向对码为例，请按照如下步骤操作：

1. 将发射机按住对码按键开机即进入对码状态，此时 G.LED 指示灯快闪，松开对码按键；
2. 接收机上电等待 1 秒没有连接即自动进入对码状态，此时接收机 LED 快闪；
3. 对码成功后，发射机 G.LED 指示灯和接收机 LED 指示灯常亮；
4. 检查发射机、接收机是否正常工作。如需重新对码，请重复以上步骤。

注：FS-MG2-BS 发射机采用 2A-BS 协议，只兼容该协议的接收机；不同的接收机对码方式不同，具体对码方式请访问 FLYSKY 官网查询接收机说明书或其他相关资料。

摇杆校准

当油门和手轮发生机械性偏离，如回中或最大 / 最小行程出现偏差时，使用此功能修正。发射机在出厂前已校准完成，如需要重新校准，请按照以下步骤执行：

1. 同步将手轮顺时针打到最大、扳机往前推到底并开机，进入校准模式。此时，G.LED 指示灯和 BATT 指示灯二闪一灭；
2. 手轮校准: 将手轮分别按顺时针和逆时针方向转至最大和最小行程，此时，G.LED 指示灯灭;
3. 扳机校准：将扳机分别向前和向后推至最大和最小行程，此时，BATT 指示灯灭；
   - 注意手轮和扳机的校准顺序可调换，校准任一通道后 G.LED 指示灯灭；全部完成后 BATT 指示灯灭。
4. 校准完成后按 “BIND” 键退出并保存数据，此时，G.LED 指示灯常亮。若校准失败，按 “BIND” 键无反应，请重复以上校准步骤。

失控保护

用于当接收机无法正常收到发射机的信号不受控制时，保护模型和操作人员的安全。

此功能默认为未设置状态，当在此状态下，接收机失控后所有 PWM 通道保持最后输出。不同接收机型号的默认失控保护状态可能有差异，具体以配对的接收机为准。

可在发射机端设置相应的失控保护值，设置步骤如下：

发射机开机正常通信状态下，将需要设置的通道保持在需要设定的失控保护值位置保持不动，同时长按对码键 (BIND）3 秒，G.LED 指示灯快闪三下表示设置成功。

注：若对码的是二合一电调接收机，失控后接收机自动进入刹车模式。

休眠模式

当发射机处于闲置报警状态时间大于 2 分钟时，即进入休眠模式。

在此模式下，发射机 BATT 指示灯为呼吸灯状态，G.LED 指示灯灭，RF 关闭。

操作发射机任意控件无效，须重启发射机才可退出休眠模式。

关机

请按以下步骤关闭发射机：

1. 先断开接收机电源；
2. 将电源开关拨到 [OFF] 位置，关闭发射机。

关闭发射机之前，请务必先断开接收机电源，然后关闭发射机。如果强行关闭发射机，将会导致遥控设备失控，失控保护设置不合理可能引起事故。

规格参数

产品型号	FS-MG2-BS
适配接收机	FS-R2A-ESC-BS
适配模型	车
通道个数	2
无线频率	2.4GHz ISM
发射功率	<20dBm
无线协议	2A-BS
通道分辨率	4096
输入电源	1.5AAA*4
低电压报警	支持
天线类型	内置单天线
充电接口	无（USB 接口仅用于供电 ）
固件更新	不支持
遥控距离	>60m(空旷无干扰地面距离)
温度范围	-10°C ~ +60°C
湿度范围	20% ~ 95%
外形尺寸	120.5*145.2*72.6mm
机身重量	128g
机身颜色	黑色
认证	CE，FCC ID: 2A2UNMG200

1.1 Transmitter Antenna

The transmitter has a built-in antenna. When the transmitter starts to work, the antenna automatically operate, without additional operations.

1.2 Receiver and Servo Installation

Make sure that the receiver is mounted in an appropriate location within the model, to ensure a stable signal, maximum range and to mitigate external interference, follow these guidelines:

Pay attention to the following when installing the receiver:

1. Make sure the receiver is not installed near motors or sources of electrical noise.
2. Keep the receiver's antenna away from conductive materials such as carbon or metal. To ensure normal function, make sure there is a gap of at least 1cm between the antenna and the conductive material.

⚠ Caution	• To prevent damage do not power on the receiver during installation.

Taking the connection between the FS-R2A-ESC-BS receiver and the servo as an example, other receiver models can refer to this connection method. However, please note that the connector definitions of different receivers may vary. For specific information, please visit the FLYSKY official website to consult the user manual or related materials

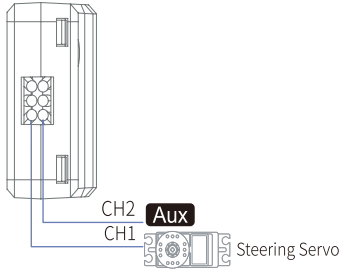

2.1 Powering ON

Follow the steps below to turn on the transmitter:

1. Check to make sure that the batteries are fully charged and installed correctly.
2. Toggle the Power Switch to the ON position. The G.LED will be solid on.

Note: For safety, always power on the transmitter before the receiver.

⚠ Warning	• Operate with caution in order to avoid damage or injury.

2.2 LED Indicator

This transmitter is equipped with a G.LED and a BATT LED, with the following functions:

1. G.LED: The green status indicator
   - When the transmitter is in binding state, the G.LED will flash rapidly.
   - When the transmitter is in normal state, the G.LED will solid on.
   - When the transmitter voltage is low, the G.LED will flash slowly.
   - When the transmitter is in idle alarm/sleep mode, the G.LED will be in gradual light state.
   - When the transmitter's failsafe is successfully set, the G.LED will flash rapidly three times.

2. BATT Indicator: The battery power indicator for the transmitter and 2-in-1 receiver
   - When the battery power is high, the BATT LED will be solid on in green.
   - When the battery power is medium, the BATT LED will be solid on in yellow.
   - When the battery power is low, the BATT LED will be solid on in red.
   - When the battery power is ultra low, the BATT LED will flash slowly in red.
   - When the transmitter is in calibration mode, the BATT LED will flash slowly in green.

Note: In three seconds after the power-on of the transmitter, the BATT LED indicates the transmitter battery power status. When the transmitter is powered on for 3 seconds, the receiver battery power status is indicated.

- When the transmitter does not receive the return message, the BATT LED will be off.
- When the receiver is de-bound, the BATT LED will maintain in the state when the receiver is de-binding.

3.1 Channel Description

The transmitter outputs a total of 2 channels, which are assigned as below, as well as the functions.

Channel	Assigned Control	Function
CH1	Steering Wheel	Steering, to make the model car to turn right or left. Turn the steering wheel in clockwise or counterclockwise direction to control the left/right steering.
CH2	Throttle Trigger	Throttle, to control the model car to move forward, reverse or brake. Push or pull the throttle trigger to control the model car forward, brake or backward.

3.2 Channel Reverse

This function reverses the motion direction of steering channel and throttle channel.

The ST.REV and TH.REV switches are reverse setting switches of steering channel and throttle channel respectively. A switch on the upper side indicates that the servo output is normal; a switch on the lower side indicates that the servo output is reverse.

Setup:

Toggle the corresponding setting switch to the upper side. Test to make sure everything is working as expected.

3.3 Trims

This function can set the trim of steering channel and throttle channel.

The ST.TRIM and TH.TRIM knobs correspond to the trim adjustments of the steering channel and throttle channel respectively. When the knob is centered by default, the trim value is zero. When adjusting counterclockwise, the trim value increases to a maximum of 120us. When adjusting clockwise, the trim value decreases to a minimum of -120us. Note that when the channel is set in reverse, the trim is reversed at the same time, that is, the trim value decreases in the counterclockwise adjustment, and the trim value increases in clockwise adjustment.

Setup:

Turn the trim knobs corresponding to the channel clockwise or counterclockwise for trim adjustment.

Note: After the throttle trim is changed, the receiver needs to be re-powered on to recognize the new throttle neutral. Otherwise, an exception may occur during vehicle reversing.

3.4 D/R

This function is used to adjust the rate of steering channel and throttle channel, so that the servo actions tend to be sensitive.

ST.D/R is used to adjust the steering channel rate. TH.D/R is used to adjust the throttle channel rate. Turning the knob counterclockwise will increase the value. Turning the knob clockwise will decrease the value. Smaller values indicate finer adjustment. The range is 0 ~100%.

Setup:

Turn the D/R knobs corresponding to the channel clockwise or counterclockwise for D/R adjustment.

3.5 Failsafe

The failsafe function is used to protect the model and personnel when the receiver is out-of-control.

By default, it is not set, and the interfaces will maintain the last output in case of out-of-control. The default failsafe protection status may vary depending on the model of the receiver, and it should be based on the specific receiver that is bound.

It can be set at the transmitter side. The setting steps are as following:

In the normal power-on state, set the control corresponding to the channel to be configured with failsafe to the preset position, meanwhile, press and hold the BIND button for 3 seconds to set the output value as the failsafe value. And the G.LED will flash rapidly three times to indicate successful configuration.

Notes: When a 2-in-1 receiver has connected, the ESC will enter the brake state when the receiver is out-of-control.

3.6 ESC Parameters Setting

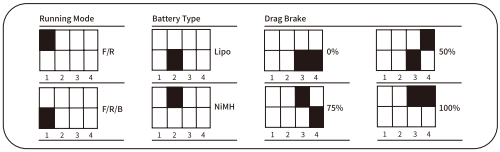

4-bit DIP Switch Sign

The ESC parameters can be set by the 4-bit DIP Switch of the transmitter, that is, the DIP switch is located at different positions and the corresponding parameter values are different. There are three parameters can be set for the ESC, which are "Running Mode", "Battery Type" and "Drag Brake".

Running Mode

Forward/Reverse/Brake(F/B/R): When the throttle trigger is pulled back and then quickly pushed forward, the motor will only brake and will not reverse. When the throttle trigger is moved back to the neutral range and pushed to the reverse area, it will reverse. This mode is applicable to general models.

Forward/Reverse(F/R): When the throttle trigger is pushed into the reverse zone, the motor will immediately reverse, which is generally applied to rock crawler.

The switch marked 1 of the 4-bit DIP switch is used to set the ESC running mode. The switch on the upper side indicates that the running mode is Forward/Reverse; and the switch on the lower side indicates that the running mode is Forward/Reverse/Brake.

Battery Type

There are LiPo and NiMH cells. It can be set according to the actual use.

The switch 2 of the 4-bit DIP switch is used to set the battery type. The switch on the upper side indicates that the battery type is NiMH cells; and the switch on the lower side indicates that the battery type is LiPo.

Drag Brake

The drag brake means that when the throttle trigger moves from the forward or reverse area to neutral range, it will produce certain braking force to the motor, the larger the value is, the greater the drag brake force is. And this is applicable to decelerate into a turn and model crawler applications. Select proper braking force according to the actual situation.

The switches 3 and 4 of the 4-bit DIP switch are used to set the ESC drag brake force. The drag brake force can be set to 0%, 50%, 75% or 100%.

Setup:

- Toggle both the switch 3 and 4 to the lower side, then the drag brake force is set to 0%.
- Toggle the switch 3 to the lower side and switch 4 to the upper side, then the drag brake force is set to 50%.
- Toggle the switch 3 to the upper side and switch 4 to the lower side, then the drag brake force is set to 75%.
- Toggle both the switch 3 and 4 to the upper side, then the drag brake force is set to 100%.

3.7 Idle Alarm

The transmitter will go into idle alarm state when there is no operation over 10 minutes.

In this mode, BATT indicator will be in gradual light state.

Operate any of transmitter controls to exit the idle alarm state.

3.8 Low Voltage Alarm

When the system detects a low voltage, it will give an alarm. Avoid accidents caused by long-term operation under low voltage.

When the voltage is detected below 4.4V(AAA battery), there is an alarm due to low voltage. At this time, the G.LED will flash slowly.

When the voltage is detected below 3.5V (ultra-low), the transmitting function is disabled. The G.LED will flash slowly.

Charging the Battery

1.Connect the charger to a USB port then connect the battery to the charger.
2.When charging, the status LED is red ,when charged, the status LED is off.
3.Do not let the battery charge unattended!
4. If the battery or charger is hot, disconnect the battery and charger immediately as this may be caused by an internal short-circuit.

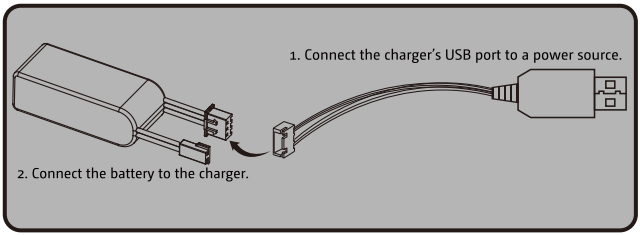

Lithium Polymer(LiPo)BatteryWarning

- Never charge a lithium polymer battery with a charger designed for Nicd, NIMH, or any other type of battery chemistry. Use ONLY charger designed for LiPo battery.
- Do not leave LiPo battery unattended during charging.
- Do not overcharge the battery.
- Always charge LiPo batteries on non-flammable, heat-resistant surfaces.
- Always use a LiPo-safe bag or container while charging. Do not allow LiPo cells to overheat at any time. Cells which reach greater than 140 Fahrenheit(60°C) will usually become damaged and will catch fire.
- Do not charge the LiPo pack while it is still in the model. Never charge or store battery packs in a vehicle.
- Do not discharge LiPo: doing so will damage the battery.
- Do not expose LiPo cell to water or moisture at any time

- Do not store battery near open flame or heater.
- Do not assemble LiPo cells or pre-assembled packs together with other LiPo cells or packs.
- Always store LiPo battery in a secure location away from children.
- Always remove the LiPo battery if model is involved in any kind of crash.
- Carefully inspect the battery and connectors for even the smallest damage.
- CAUTION: Cells may become hot after usage. Allow the pack to cool to room temperature prior to recharging.
- Do not allow the electrolyte to get into eyes or on skin. Wash affected areas immediately if they come into contact with electrolyte. Do not alter or modify connectors or wires of a LiPo battery pack.
- Always inspect the condition of the battery before charging and operating.
- Do not short circuit the LiPo battery.
- Do not have contact with a leaky/damaged battery directly.
- Do not charge battery out of recommended temperature range(0°C-45°C)

1.1 发射机天线

本发射机天线为内置天线，发射机开始工作，天线自动工作，无需单独进行操作！

1.2 接收机与舵机安装

请结合相应模型的结构选择合适的位置安装接收机， 同时为了确保接收机的性能和遥控距离的稳定，并防止外界干扰，请注意以下操作事项：

安装过程中请注意以下事项：

1. 确保接收机安装在远离电机，或电子噪声过多的区域。
2. 接收机天线需远离导电材料 , 例如金属棒和碳纤物质。为了避免影响正常工作，请确保接收机和导电材料之间至少有 1 厘米以上的距离。

⚠ 注意	• 准备过程中，请勿连接接收机电源，避免造成不必要的损失。

以 FS-R2A-ESC-BS 接收机与舵机连接为例，其他型号接收机可参考此连接方式。但需注意不同接收机接口定义可能不同，具体信息请访问 FLYSKY 官网查询说明书或相关资料。

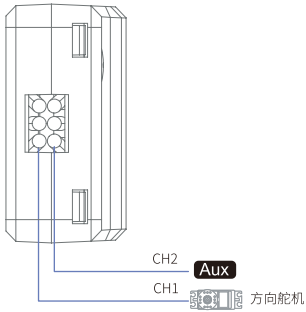

2.1 开机

请按照以下步骤进行开机：

1. 检查系统状态，确保电池电量充足且安装正确；
2. 将电源开关拨到 [ON] 位置，G.LED 指示灯常亮。

注：为保障模型及人员安全，使用时请先打开发射机再给接收机通电。

⚠ 警告	• 此时系统已启动，请谨慎操作，否则可能导致产品损坏或人员伤亡。

2.2 LED 指示

本发射机配备 G.LED 灯和 BATT 指示灯，其功能如下：

1. G.LED：绿色状态指示灯
   - 快闪：对码状态
   - 常亮：正常状态
   - 呼吸灯：闲置状态 / 休眠模式
   - 慢闪：电压低
   - 快闪三下：失控保护设置成功

2. BATT：发射机 / 二合一接收机电池电量状态指示灯
   - 绿色常亮：满电
   - 黄色常亮：电量充足
   - 红色常亮：电压低
   - 红色慢闪：电压超低
   - 绿色慢闪：校准中

注：发射机开机后前 3 秒，BATT 指示灯指示发射机电池电量状态；当发射机开机 3 秒后，则指示接收机电池电量状态：

- 未收到接收机回传信息时，BATT 指示灯灭。
- 接收机掉码时，BATT 指示灯则保持掉码时状态。

3 系统功能

此章节主要介绍系统各项功能操作。

3.1 通道说明

该发射机共输出 2 个通道，控件分配及相关功能如下：

通道	已分配的控件	功能
CH1	方向手轮	方向，控制车子左右转向。 沿顺时针或逆时针方向旋转手轮，可控制车子左右转向。
CH2	油门扳机	油门，控制车子前后行驶 推或扣油门扳机控制车子前进、刹车或后退。

3.2 通道反向

用于调整各舵机或马达动作方向。

ST.REV 开关和 TH.REV 开关分别为方向通道、油门通道反向设置开关。

开关在上端，表示舵机输出为正向；开关在下端，表示舵机输出为反向。

功能设置：

将对应的开关拨到对应的位置，测试确保所有舵机或马达动作方向与实际预想方向相同。

3.3 微调调节

该功能可设置方向通道和油门通道的微调中位点。

ST.TRIM 和 TH.TRIM 旋钮分别对应方向通道和油门通道微调调节。默认旋钮居中时，微调值为 0。 逆时针调节时，则增大微调值，最大为 120us; 顺时针调节时，则减少微调值，最小为 -120us。注意当通道设置反向后，微调同步反向，即逆时针调节时减少微调值，顺时针调节时增大微调值。

功能设置：

顺时针或逆时针旋转通道对应的微调旋钮调节。

注：CH2 油门微调调整后，接收机须重新通电以识别新的油门中位，否则可能会出现倒车异常的现象。

3.4 比率调节

该功能用于调节方向通道和油门通道的比率，使舵机动作趋于灵敏。

ST. D/R 和 TH.D/R 旋钮分别对应方向通道和油门通道比率调节。逆时针调节数值增大，反之减小。数值越小调节越细腻，调节范围为 0~100%。

功能设置：

顺时针或逆时针旋转通道对应的比率调节旋钮调节。

3.5 失控保护

用于当接收机无法正常收到发射机的信号不受控制时，保护模型和操作人员的安全。

此功能默认为未设置状态，当在此状态下，接收机失控后所有通道保持最后输出。不同接收机型号的默认失控保护状态可能有差异，具体以配对的接收机为准。

可在发射机端设置相应的失控保护值，设置步骤如下：

发射机开机正常通信状态下，将需要设置的通道保持在需要设定的失控保护值位置保持不动，同时长按对码键 (BIND) 3 秒，G.LED 指示灯快闪三下表示设置成功。

注：若对码的是二合一电调接收机，失控后接收机自动进入刹车模式。

3.6 电调参数设置

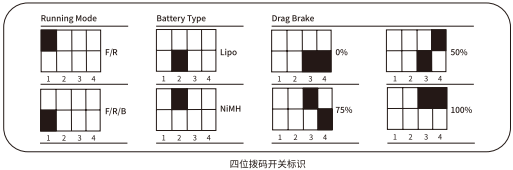

四位拨码开关标识

通过发射机的拨码开关设置电调参数，即拨码开关位于不同位置对应参数值不同。有三个参数项可以设置，分别是“运行模式”、“电池类型”、“拖刹力度”。

运行模式

正转 / 反转 / 刹车 : 当油门扳机向后扣后快速向前推时，电机只是刹车，不会产生倒车动作 ; 当油门扳机回到中点区域并推至反向区域时，则产生倒车动作。此模式适用于一般车型。

正转 / 反转：当油门扳机推至反向区域时，电机立即产生倒车动作，该模式一般用于攀爬车等特种车辆。

四位拨码开关第 1 位开关用于设置电调运转模式，开关在上端，表示电机运行模式为正转 / 反转；开关在下端，表示电机运行模式为正转 / 反转 / 刹车。

电池类型

有锂电和镍氢两种选择，根据实际使用情况设置即可。

四位拨码开关第 2 位开关用于设置电调电池类型，开关在上端，表示电池类型为镍氢；开关在下端，表示电池类型为锂电。

拖刹力度

拖刹是指当油门扳机从正向区域或反向区域转入中点区域内时，对电机产生一定的刹车力，这样可以模拟有刷电机的碳刷对电机转子的阻力，适合减速入弯及攀爬车应用。根据实际情况，选择合适的拖刹力度即可。

四位拨码开关第 3 位和 4 位开关用于设置电调拖刹力度。拖刹力度可设置为 0%、50%、75% 或 100%。

功能设置：

- 将拨码开关 3 和拨码开关 4 拨至下端，拖刹力度即设置为 0%；
- 将拨码开关 3 拨至下端，拨码开关 4 拨至上端，拖刹力度即设置为 50%；
- 将拨码开关 3 拨至上端，拨码开关 4 拨至下端，拖刹力度即设置为 75%；
- 将拨码开关 3 和拨码开关 4 拨至上端，拖刹力度即设置为 100%。

3.7 闲置报警

当发射机未操作时间大于 10 分钟时，即进入闲置报警状态。

在此状态下，发射机 BATT 指示灯为呼吸灯状态。

操作发射机任意控件可退出闲置报警状态。

3.8 低电压报警

当发射机电池处于低电压状态时，即发出报警。避免控制系统在低电压状态下长时间运行造成意外。

当电池电压低于 4.4V（AAA 电池），即进入低电报警状态，G.LED 指示灯以慢闪状态提示。

当电池电压超低时（低于 3.5V 时），**发射机 RF 功能关闭**，G.LED 指示灯以慢闪状态提示。

电池充电提示

1. 将充电器连接到USB端口，然后将电池连接到充电器。
2. 充电时，状态LED为红色；充满电时，LED灯灭。
3. 不要让电池无人看管！
4. 如果电池或充电器发热，请立即断开电池和充电器的连接，因为这可能是由短路引起的。

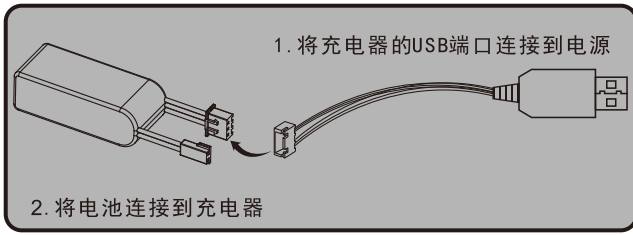

锂离子(LiPo)电池警告

- 请不要使用为镍镉、镍氢或其他任何类型电池设计的充电器器为锂电池充电。
- 请使用锂电池（LiPo）专用的充电器。
- 请不要在无人看管的情况下为锂电池充电。
- 不要过度充电或过度放电锂电池（LiPo），这样做会损坏锂电池。
- 请将锂电池放到远离可燃物或高温的地方充电和存放。
- 充电时请将锂电池放在锂电池专用防爆袋中为锂电池充电。
- 请不要让锂电池在任何情况下过热。达到140华氏度(60摄氏度)以上的电池通常会损坏并起火。
- 请不要在车辆中充电或存放电池包。
- 请不要在任何时候将锂电池放在水中或潮湿的环境中。
- 请不要将锂电池与其它锂电池或其他电池一起组装或预组装。
- 请始终将锂电池存放在远离儿童的安全位置。
- 如果模型涉及任何类型的损毁，请先移除锂电池后仔细检查电池和电池连接器，即使是最小的损坏。
- 警告：电池使用后可能会变热。在重新充电之前，请让电池包冷却至室温。
- 请不要让电解液进入眼睛或皮肤。如果与电解液接触，请立即清洗受影响的区域。
- 请不要更改或修改电池包的连接器和电线。
- 在充电和操作之前，请始终检查电池的状态。
- 请不要使用短路的锂电池。
- 请不要直接接触泄漏/损坏的电池。
- 不要在推荐的温度范围之外(0° C-45° C)充电电池。

Differential installation

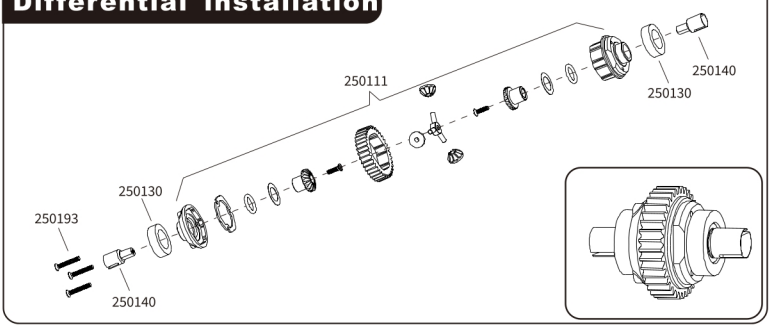

REDUCTION GEAR BOX

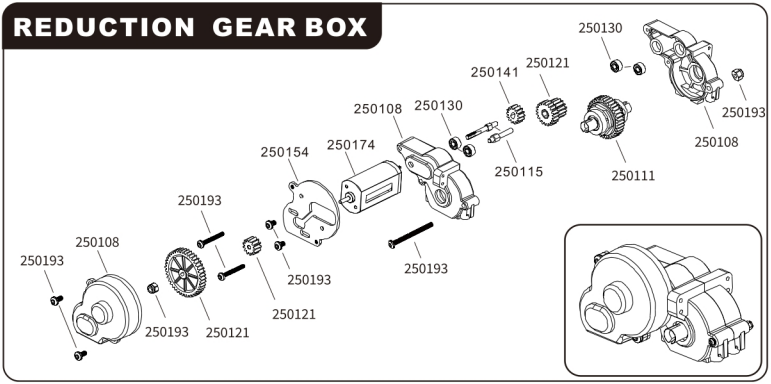

REAR SHOCKS ASSEMBLY

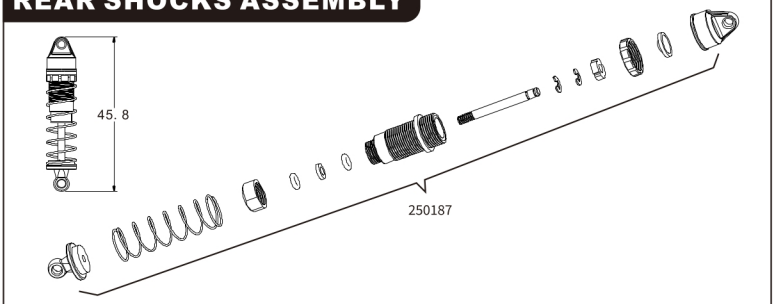

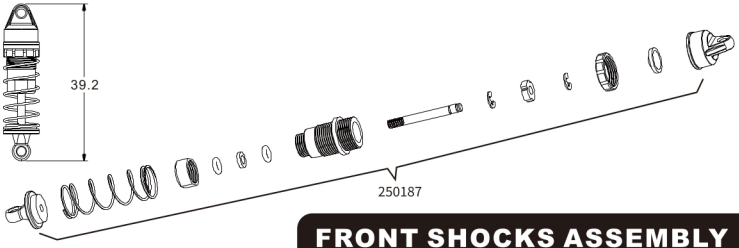

FRONT SHOCKS ASSEMBLY

Tire Set

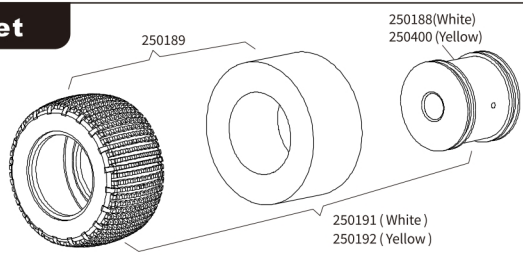

Front Assembly

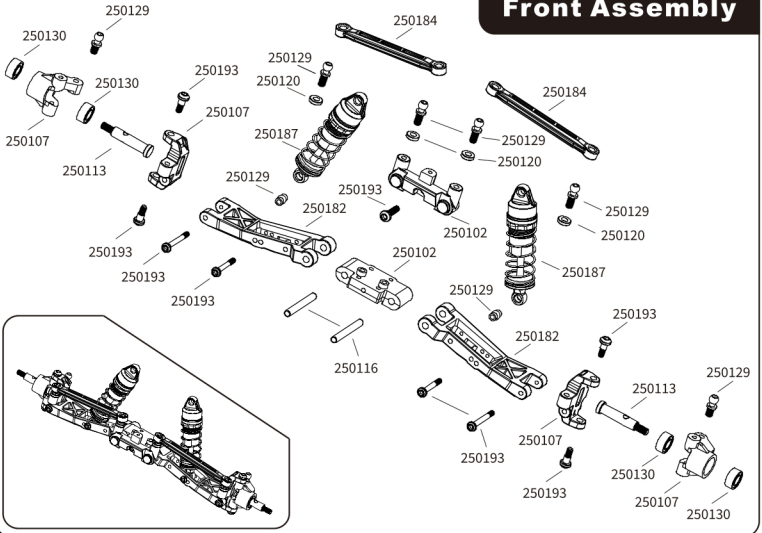

Rear Assembly

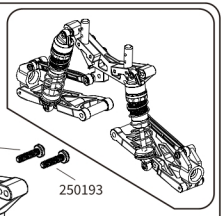

250183
250193
250193
250164
250129
250129
250193
250129
250184
250107
250164
250193
250193
250129
250182
250184
250129
250187
250129
250193
250187
250193
250107

Front Assembly

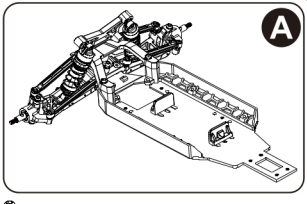

250193
250129
250183
250129
250184
250193
250193
250129
250129
250193
250106
250129
250109
250193
250164
250184
250117
250193
250117
250193
250110
250109
250102
250172
250193
250193
250193

Chassis Installation A

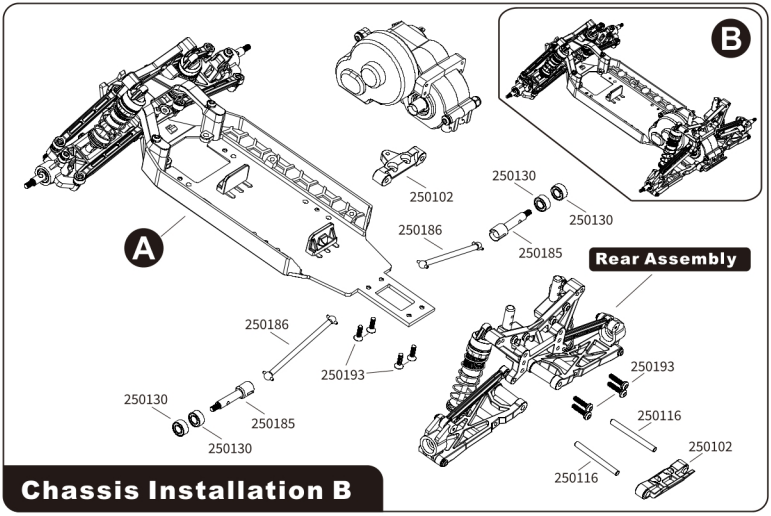

Chassis Installation B

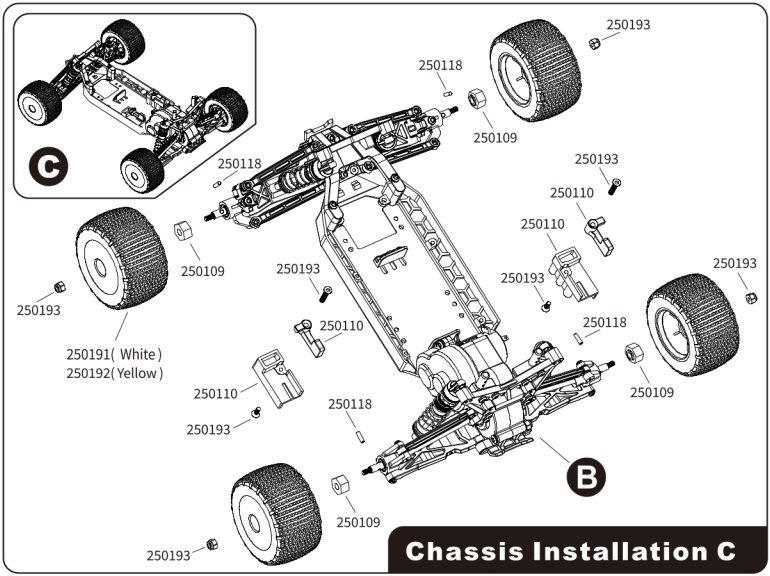

Chassis Installation C

Chassis Installation D

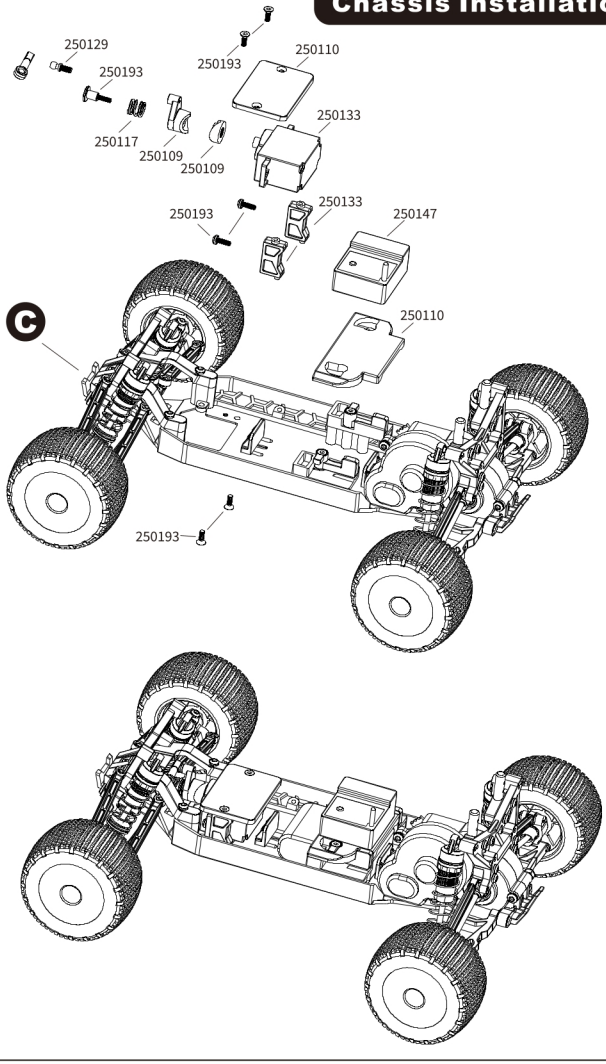

Chassis Installation E

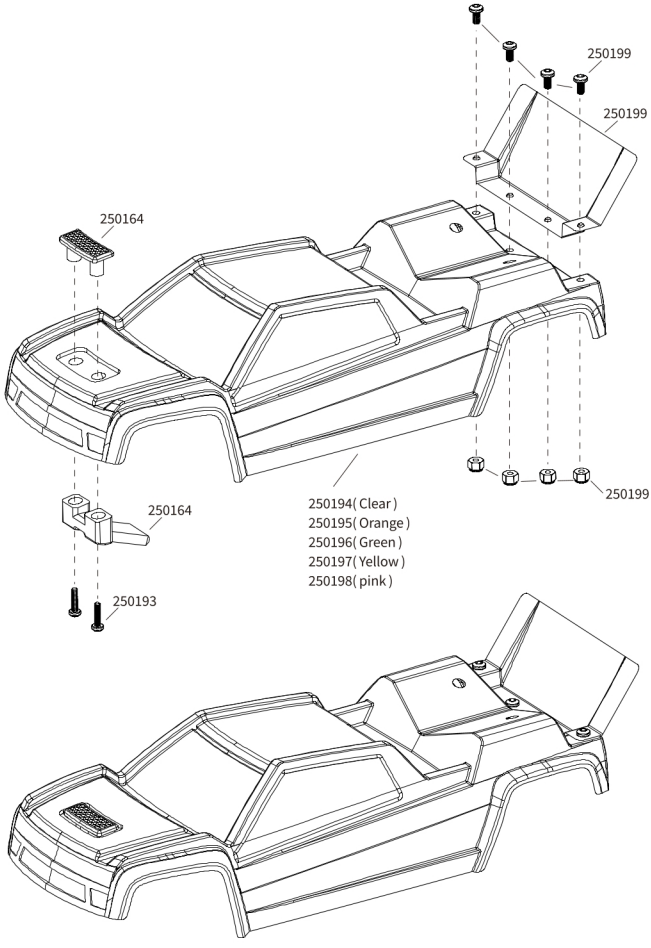

Chassis Installation F

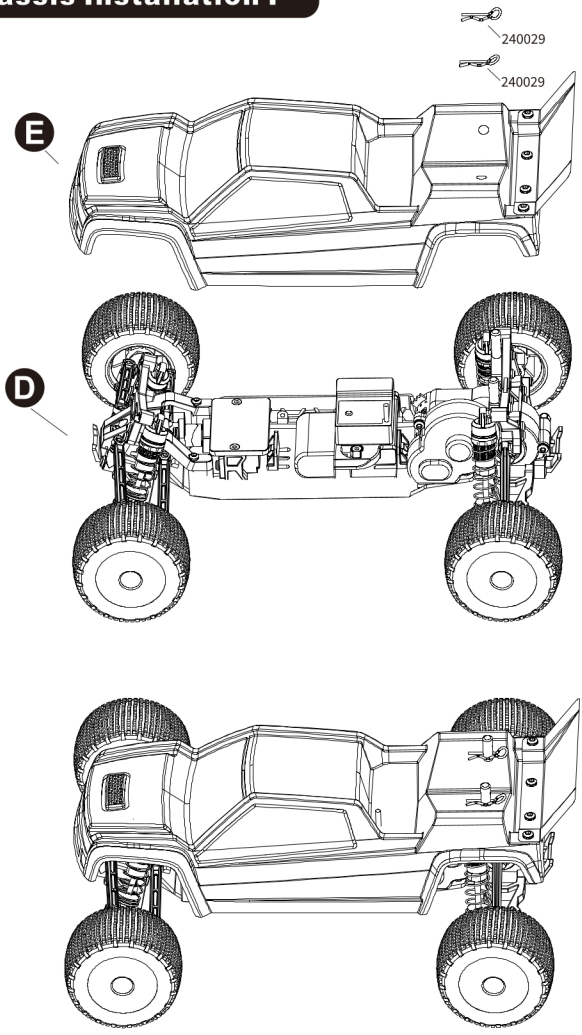

Brushless Motor Installation

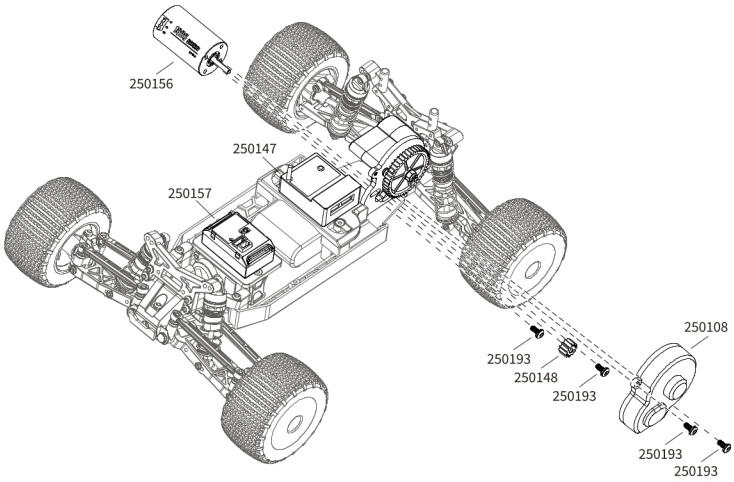

Brushless ESC Installation

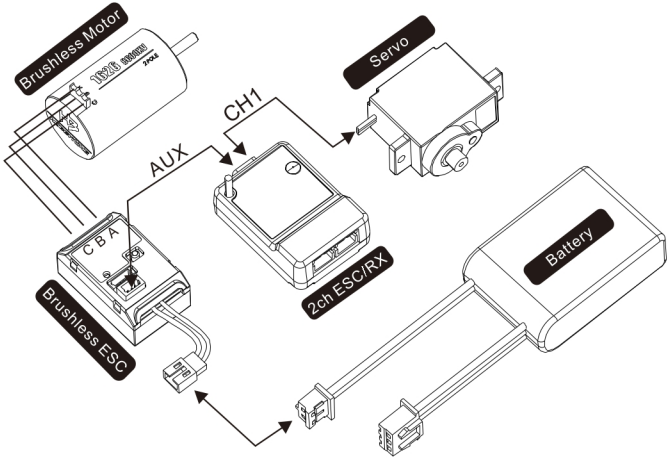

无刷电调设定

注意事项

1. 请务必仔细连接好各部件，若连接不良或发生短路，将不能正常控制车辆，甚至出现设备损坏等情况。
2. 使用此产品前请认真查看各电子设备及车架说明书，确保动力搭配合理，避免错误使用导致设备损坏。
3. 勿使电调外部温度超 90℃/194℉，高温将会损坏产品。
4. 长时间不使用时，切记断开电池与电调的连接。当电池未断开连接时，即使电调开关处于关闭状态，电调也会一直消耗电能（只是电流非常小而已），长时间未断开将可能导致电池过放而损坏。

产品规格

型号	MINI28-RTR
持续/峰值电流	25A /60A
电池节数	2S LiPo（仅支持 2S）
BEC **输出**	6V @ 最大 3.5A
支持电机	1626 尺寸无感无刷电机
主要适用车型	1/24-1/28 On-road&Off-road

校准油门行程

电调接上电池，打开遥控器。电调关机状态下，持续按住电源按键不松开，电调上红色 LED 开始闪烁（同时马达鸣叫），可以松开按键。此时需要按照顺序设定三个点：油门中点、最大油门点和最大刹车点。

1）油门扳机留在中点位置，按一下电源按键，绿灯闪烁 1 次，马达同步鸣叫“哔”1 声，表示已存储中点位置；

2）扳机拉到最大油门位置，按一下电源按键，绿灯闪烁 2 次，马达同步鸣叫“哔-哔-”2 声，表示已存储最大油门点；

3）扳机推到最大刹车位置，按一下电源按键，绿灯闪烁 3 次，马达同步鸣叫“哔-哔-哔-”3 声，表示已存储最大刹车点；

油门行程校准完毕，即可正常操作。

开机鸣音说明

开关机说明：关机状态下短按电源按键开机；开机状态下长按电源按键关机。

开机鸣音说明：开机后，电机会发出两声“哔”鸣音表示 2S 锂电节数。

行驶过程中指示灯（LED）状态说明

1）油门扳机处于中点位置，红灯恒亮。

2）前进时，绿灯闪烁；当扳机处于最大油门时，绿灯变为恒亮。

3）刹车时，绿灯闪烁；若最大刹车力度设为 100%，当扳机处于最大刹车时，绿灯变为恒亮。

4）倒车时，绿灯闪烁。

参数设定表（灰色内容表示出厂默认值）

设定项目	选项1	选项2	选项3	选项4	选项5	选项6	选项7	选项8
1.运行模式	正转带刹车	正反转带刹车						
2.拖刹力度	0%	5%	10%	15%	20%	25%	30%	40%
3.电池低压保护阈值	不保护	2.6V/Cell	2.8V/Cell	3.0V/Cell	3.2V/Cell	3.4V/Cell		
4.启动加速度	1级	2级	3级	4级				
5.最大刹车力度	25%	50%	75%	100%				

参数设定方法

利用 LED 设定盒进行参数设置：

调整参数时，将电调油门信号线连接到 LED 设定盒上标识着 “ - + 几 ” 的 3pin 接口上，最后给电调接上电池并开机，通过设定盒上的 “ ITEM ” 和 “VALUE ” 按键即可快速选择设定项目和参数值，然后按 “ OK ” 键后,新参数即可存入电调中。

恢复出厂设置

利用 LED 设定盒恢复出厂设定：

设定盒与电调连通后，按下 “ RESET ” 键，然后再按下 “ OK ” 保存，即可恢复出厂设置。

触发保护时 LED 指示灯状态说明

1：红灯持续闪烁（单闪，“☆，☆，☆”）：电调进入低压保护状态。

2：绿灯持续闪烁（单闪，“☆，☆，☆”）：电调温度过高，电调进入过热保护状态。

Brushless ESC Parameters

Warnings

1. Please ensure that all devices are connected properly. If the connection is poor or short circuited, you may not be able to control the car properly, or damage the equipment.
2. Read the manuals of all items being used in the build. Ensure gearing,setup,and overall install is correct and reasonable.
3. Stop usage if the motor exceeds 90℃/194℉ as this may cause damage to the ESC.
4. Remember to disconnect the battery from the ESC when not in use for a long time. When the battery is not disconnected, even if the ESC switch is in the off state, the ESC will continue to consume power (with very low current), which may cause the battery to be over discharged and damaged if it is not disconnected for a long time.

Specifications

Model	MINI28-RTR
Continuous/Peak Current	25A / 60A
LiPo Cells	2S LiPo(Only 2S)
BEC Output	6V @ 3.5A Peak
Motor Type	1626 size sensorless brushless motor
Applications	1/24-1/28 On-road&Off-road

ESC/Radio Calibration

Connect the battery to the ESC, turn on the transmitter/radio but keep the ESC turned off. Press and hold the power button until the red light on the ESC starts flashing (while the motor beeps), you can release the button, then three points need to be set in order: the neutral position, the full throttle position, and the full brake position.
1) Leave the throttle trigger at the neutral position,press the power button, the green light flashes 1 time and the motor beeps 1 time to accept the neutral position.
2) Pull the trigger to the full throttle position,press the power button, the green light flashes 2 time and the motor beeps 2 time to accept the full throttle position.
3) Pull the trigger to the full brake position,press the power button, the green light flashes 3 time and the motor beeps 3 time to accept the full brake position.
The motor can be started after the calibration is complete.

Power On/Off

In the off state, short press the power button to turn on the esc; Long press the power button to turn off the esc.
After turning on the ESC, the motor will emit two beeps to indicate the 2S lithium battery.

The status of the indicator light during running.

1) The red light turns on solid when the throttle trigger is in the neutral zone.
2) The green light blinks when your vehicle runs forward. The green light will turns solid when pulling the trigger to the full throttle position.
3) The green light blinks when you brake your vehicle. The green light will turns solid when setting the “Max.Brake Force” to “100%” and pushing the trigger to the full brake position.
4) The green light blinks when you reverse your vehicle.

Programmable Items(Yellow highlighted content indicates factory default values)

Programmable Item	Option 1	Option 2	Option 3	Option 4	Option 5	Option 6	Option 7	Option 8
1.Running Mode	Forward with Brake	Forward/Reverse with Brake						
2.Drag Brake Force	0%	5%	10%	15%	20%	25%	30%	40%
3.Low Voltage Cutoff	Disabled	2.6V/Cell	2.8V/Cell	3.0V/Cell	3.2V/Cell	3.4V/Cell		
4.Punch	Level 1	Level 2	Level 3	Level 4				
5.Max Brake Force	25%	50%	75%	100%				

Programming Method

Use LED Program Box for parameter setting:
Connect the throttle signal cable of the ESC to the 3-pin interface marked with "-+ ת" on the LED Program Box. Finally, connect the battery to the ESC and turn it on. Use the "ITEM" and "VALUE" buttons on program box to quickly select the programmable items and parameter values. After pressing the "OK" button, the new settings can be stored in the ESC.

Factory Reset

Use LED Program Box to restore factory settings :
After connect program box and the ESC, press “RESET” button and then press “OK” button, the factory settings can be restored.

Indicator light status when triggering protection

1 : The red light flashes continuously: the esc enters low voltage protection status.

2 : The green light flashes continuously: the esc enters overheat protection status.

Spare parts list

HB Speck-T Wheel (White)
Part No:250188

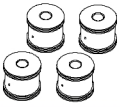

HB Speck-T Wheel (Yellow)
Part No: 250400

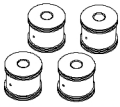

Suspension mount set
Part No:250102



HB Speck Wide Track Arm Set
Part No:250182

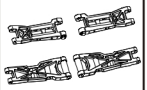

HB Speck-T Shock Tower (Front/Rear)
Part No:250183

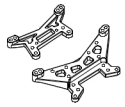

HB Speck-SCT/T/MT Body Mount
Part No:250164

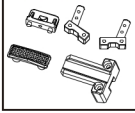

HB Speck Wide Track Suspension link
Part No:250184



Front bulk head & wing mount
Part No:250106

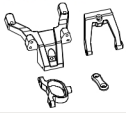

Wheel hub and steering spindle
Part No:250107

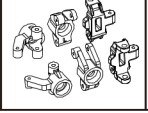

transmission gear box
Part No:250108

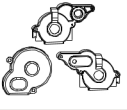

Steering rack and wheel hex
Part No:250109



Chassis plastic parts
Part No:250110



Complete differential set
Part No:250111



Rear wheel out drive
Part No:250185

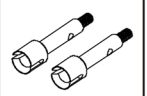

Front wheel out drive
Part No:250113



HB Wide Track Rear wheel dog bones
Part No:250186

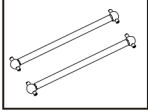

Transmission gear shaft
Part No:250115

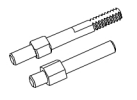

Differential drive cup
Part No:250140

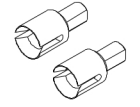

Hb Speck-SCT Aluminum main chassis
Part No:250172

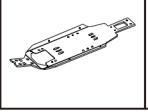

7075T6 2mm Motor Mount
Part No:250154



Front/rear swing arm shaft
Part No:250116



steering hardware set
Part No:250117



Wheel hex pin 1.5X5mm
Part No:250118

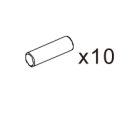

Aluminum shim 4X1.4X1mm
Part No:250120



Micro Body Clip
Part No:240029

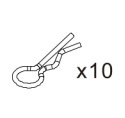

Complete ball stud set
Part No:250129

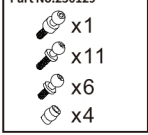

Rubber sealed ball bearing set
Part No:250130

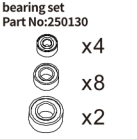

Metal idle gear
Part No:250141



HB Speck-T Complete screw set
Part No:250193



Plastic main & middle gear
Part No:250121



Spare parts list

Plastic main & middle gear (Brushless Pinion Gear)
Part No:250148



HB Speck-T/MT Oil Shock
Part No:250187



HB Speck-T Tire
Part No:250189



HB Speck-T Tire Set (White)
Part No:250191

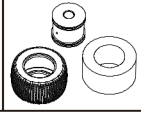

HB Speck-T Tire Set (Yellow)
Part No:250192

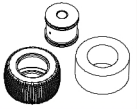

HB/Flysky 2ch ESC/RX Combo
Part No:250134



HB/Flysky 2ch Transmitter
Part No:250146



HB/Flysky 2ch ESC/RX
Part No:250147

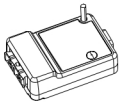

050 size 37T motor
Part No:250174

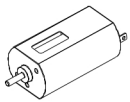

Brushless Set
Mini28 25A ESC
1626 8000KV motor
Part No:250179

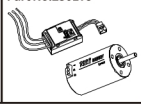

HB/HW Brushless Motor 1626SL-8000KV
Part No:250156



HB/HW MINI28 Brushless ESC
Part No:250157

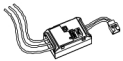

HB/HW ESC Setting Card
Part No:250158

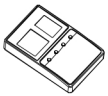

5gram servo
Part No:250133

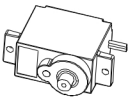

7.4v 350mah lipo battery
Part No:250135

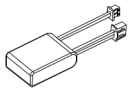

7.4V USB Charger
Part No:250136



HB Speck-T Body (Clear)
Part No:250194

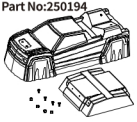

HB Speck-T Body (Orange)
Part No:250195



HB Speck-T Body (Green)
Part No:250196



HB Speck-T Body (Yellow)
Part No:250197



HB Speck-T Body (pink)
Part No:250198



Clear rear wing (2pcs)
Part No:250199



Brass Weight, 3.5grams, Speck B
Part No:250128



Optional sway bar set 1.0mm
Part No:250142

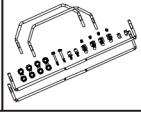

Aluminum Oil Shock Set, Speck-B/T
Part No:250222



Aluminum Transmission Case, Speck B
Part No:250201

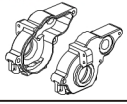

Aluminum Gear Cover, Speck B
Part No:250202



Aluminum C-Hub, Speck B
Part No:250203



Aluminum Steering Spindle, Speck B
Part No:250204

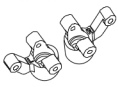

Aluminum Rear Hub, Speck
Part No:250205

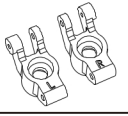

Spare parts list

Aluminum Shock Tower Set, Speck-T **Part No:250219** 	**WideTrack Aluminum Rear Suspension Arm, Speck-T** **Part No:250220** 	**WideTrack Aluminum Front Suspension Arm, Speck-T** **Part No:250221** 	**Aluminum C & D Suspension Mount, Speck B** **Part No:250209** 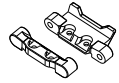	**Aluminum A & B Suspension Mount, Speck B** **Part No:250210** 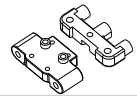
Aluminum Steering Rack Set, Speck B **Part No:250211** 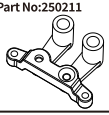	**Aluminum Servo Mount** **Part No:250214** 	**Aluminum Servo Horn** **Part No:250215** 	**Aluminum Wheel Hex** **Part No:250216** 	**Optional Adjustable Links Set** **Part No:250217** 

SPECK-T

1/24 RACE TRUCK

Manufacturer: HobbyPlus RC Tech Co., Ltd
E-mail : enquiries@hobbyplus.com.cn
Website : www.hbplusrc.com

WARNING:This product can expose you to chemicals known to the state of California to cause cancer and birth defects or other reproductive harm. For more information, go to https://www.p65warnings.ca.gov/